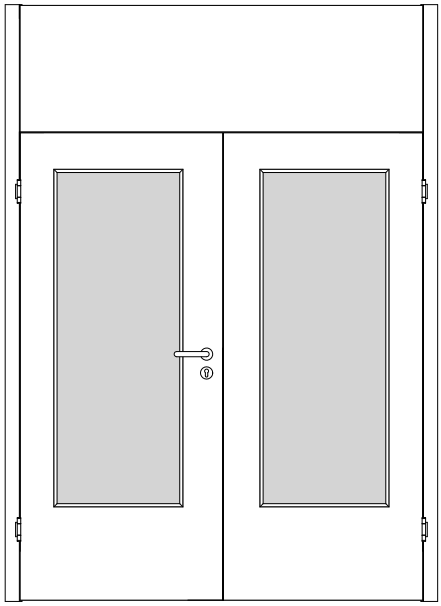

A_DT-GH_OBOKOQ_TB-LA_FU_STU-2FLG.pdf

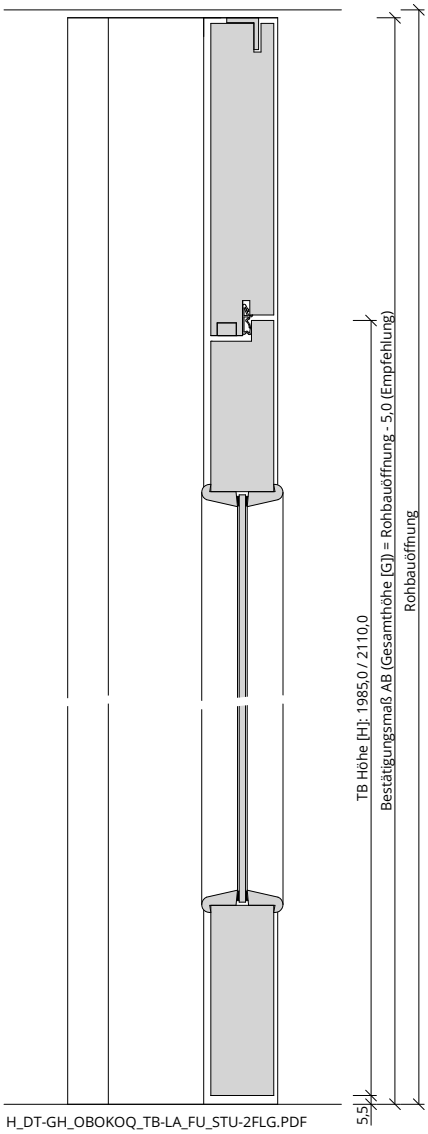

H_DT-GH_OBOKOQ_TB-LA_FU_STU-2FLG.PDF

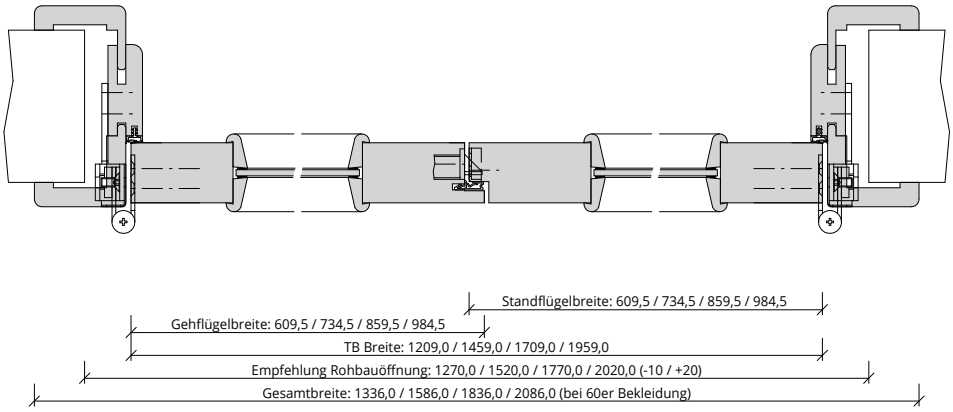

Q_DT-GH_OBOKOQ_TB-LA_FU_STU-2FLG.PDF